# SolarWorld Sunbox® 4

## Technical performance

### Sunbox® 4

| | |
|---|---|
| Designation | Sunbox 4 |
| Max. system voltage (safety class II) | 1000 V DC |
| Max. system voltage (US) | 600 V DC |
| Rated current | 10 A |
| Application class | A |
| Protection mode | IP2x (discrete) / IP65 (assembled) |
| Max. ambient temperature | -40°C ... +85°C |

### Suncable®

| | |
|---|---|
| Insulation | polyolefin copolymer electron-beam cross-linked |
| Sheath | polyolefin copolymer electron-beam cross-linked |
| Conductor | Tinned fine copper strands, according to VDE 0295 / IEC 60228, class 5 |
| Cross-section | 1 x 4 mm2 (AWG 12) |
| Conductor diameter | 2.6 mm |
| Outer diameter | 7.2 mm |
| Max. temperature on conductor | + 125 °C/20000 h |
| Max. conductor temperature at short circuit | 280 °C / 5 s |
| Fire performance | IEC 60332-1, UL 1581 1061/VW1 |
| Approvals | TÜV 2 PfG 1169/08.2007 PV1-F, UL 4703 PV WIRE, UL 854 USE-2 |
| Length (L1 = L2) | 1050 mm |

### Connector

| | |
|---|---|
| Type | Multi-Contact, PV-KST4 / PV-KBT4 - UR |
| Contact material | Tinned copper |
| Insulation material | PC / PA |
| Protection mode | IP2x (unmated) / IP67 (mated) |
| Approvals | IEC 61215, UL recognized, safety class II, DIN V VDE V 0126-3 |

### Sunbox® 4 Qualification

| | |
|---|---|
| According to: | FprEN 50548:2010, UL 1703 3rd Ed. |

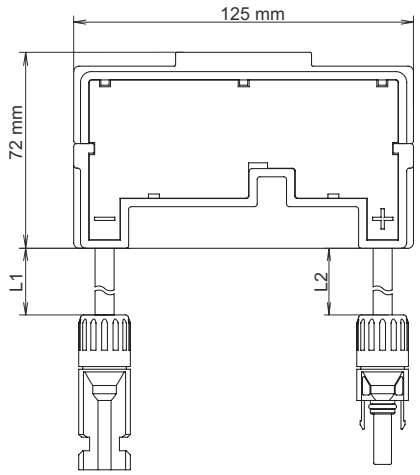


SolarWorld AG reserves the right to make specification changes without prior notice.

www.solarworld-usa.com

We turn sunlight into power.